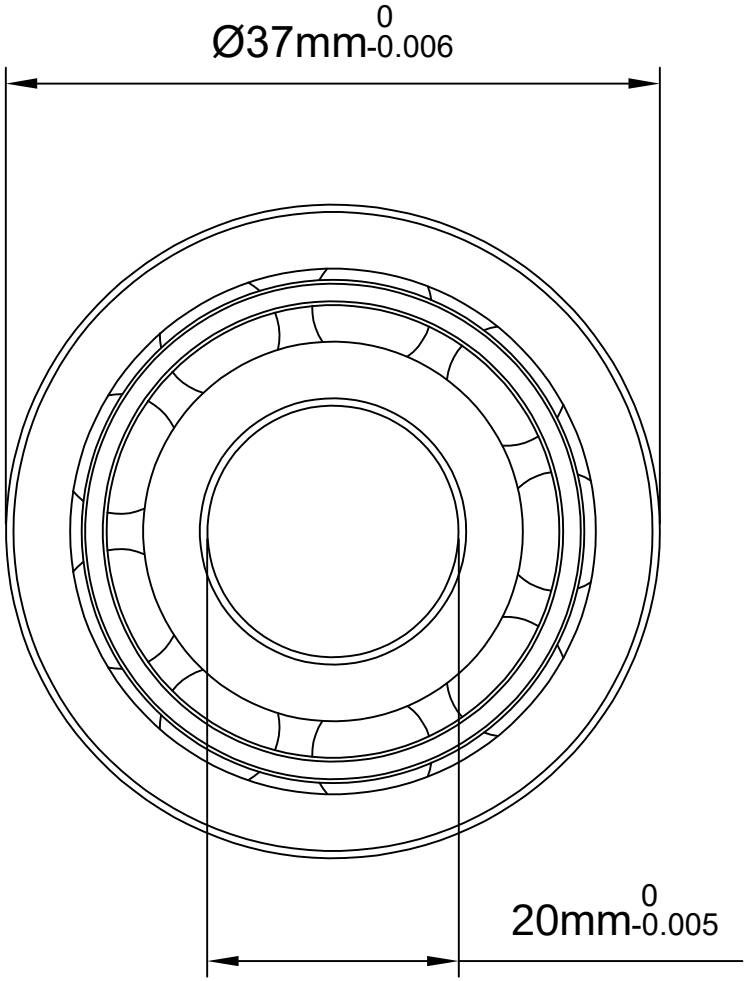

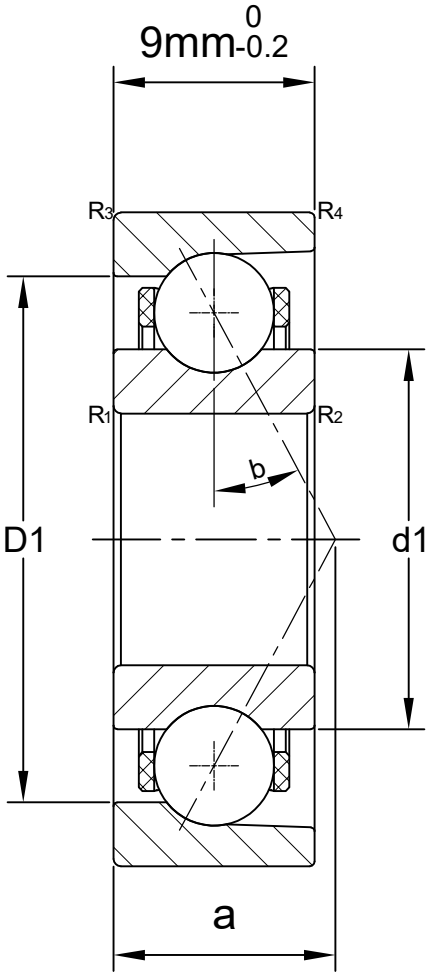

LILY BEARING

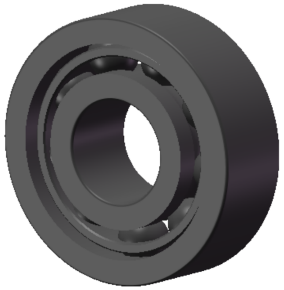

b:	15°		Contact Angle
$R_{3,4}$:	min 0.2	mm	Chamfer Dimension
$R_{1,2}$:	min 0.3	mm	Chamfer Dimension
D1:	31.4	mm	Shoulder Dia Of Outer Ring
d1:	25.6	mm	Shoulder Dia Of inner Ring
a:	8.4	mm	Distance From Side Face To Pressure Point

LILY®	SHANGHAI LILY BEARING LIMITED Email: lilybearing@lily-bearing.com
Part Number	71904/CD/HCP4A Angular Contact Ball Bearings