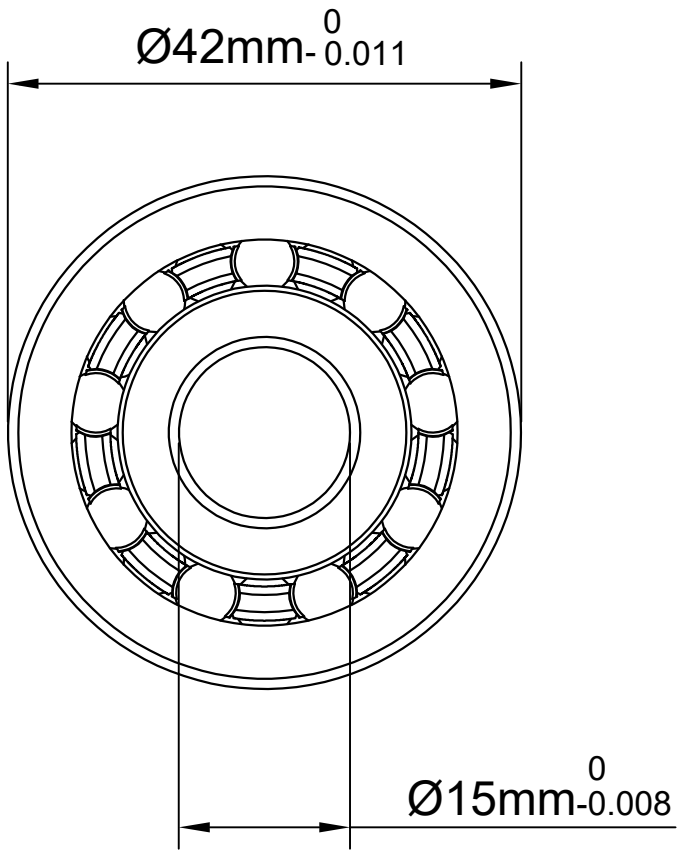


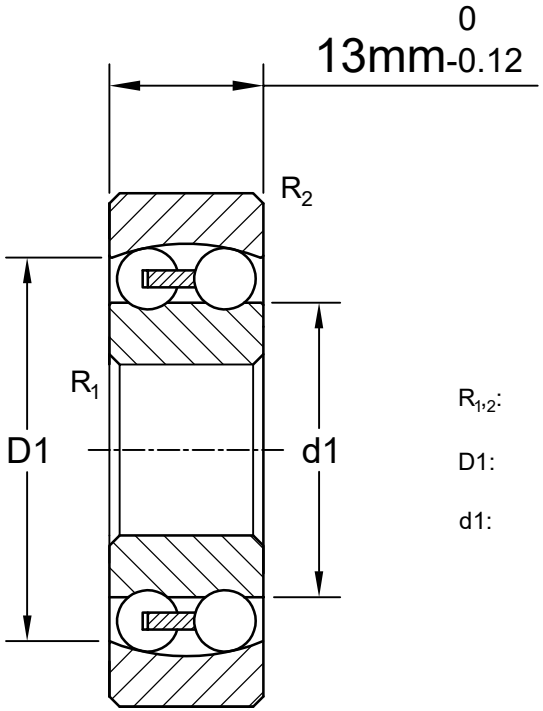


LILY BEARING

| | | | |
|---|---|---|---|
| $R_{1,2}$: | min 1 | mm | Chamfer Dimension |
| D1: | ≈34.3 | mm | Shoulder Dia of Outer Ring |
| d1: | ≈23.9 | mm | Shoulder Dia of Inner Ring |

| | |
|---|---|
| LILY® | SHANGHAI LILY BEARING LIMITED<br>Email: lilybearing@lily-bearing.com |
| Part Number | 1302 ETN9 Self-aligning Ball Bearings |