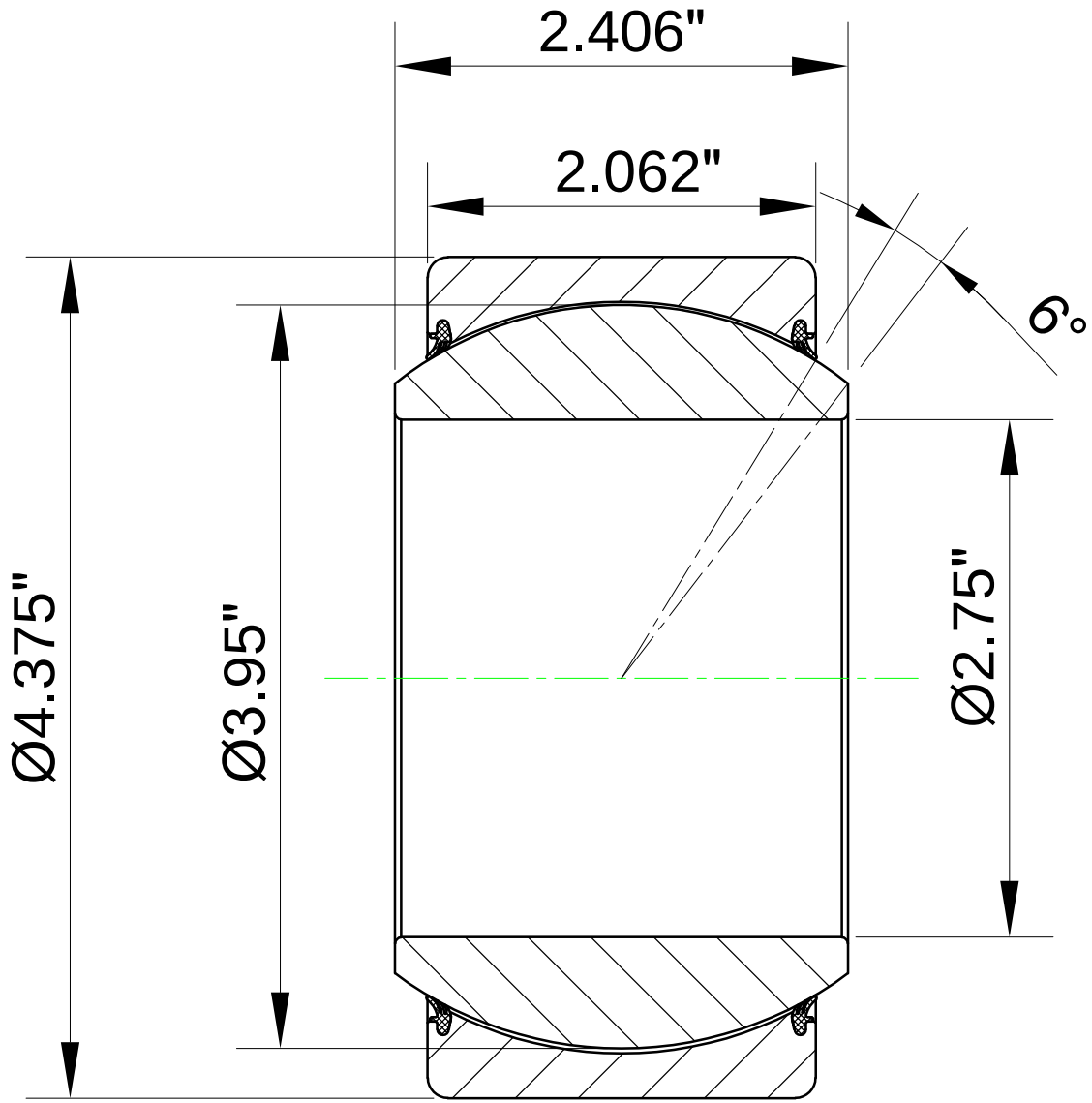

LILY®	SHANGHAI LILY BEARING LIMITED Email: lilybearing@lily-bearing.com
Part Number	GEZ 212 TXE-2LS Spherical Plain Bearing