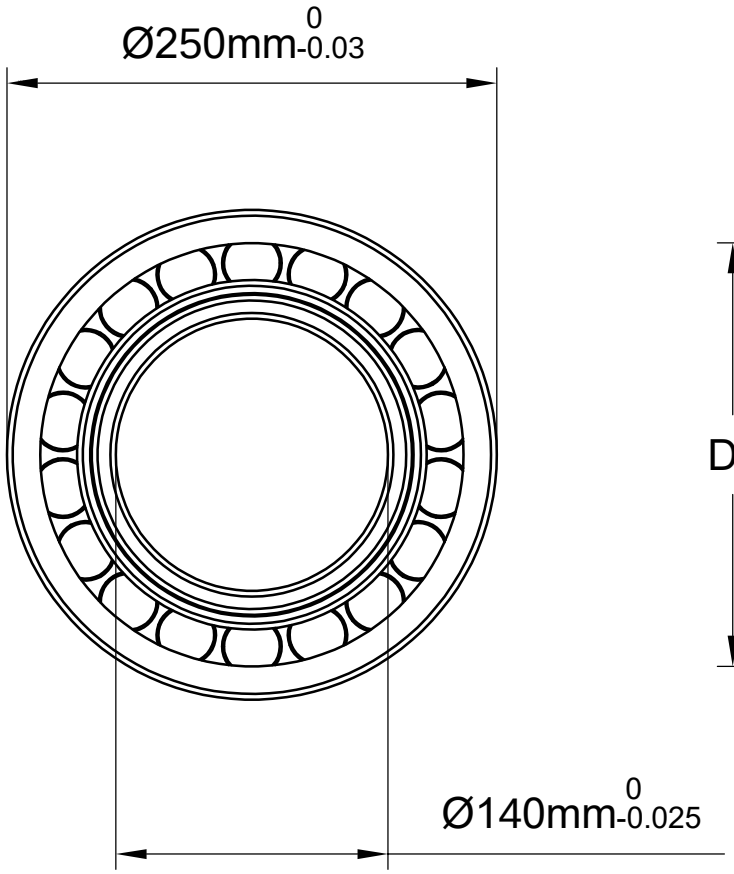

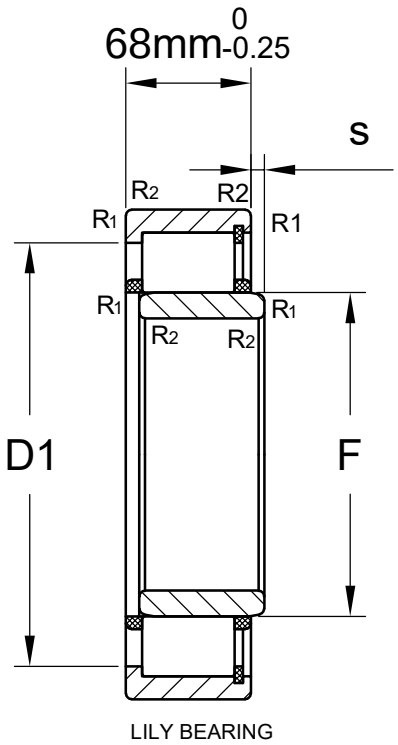

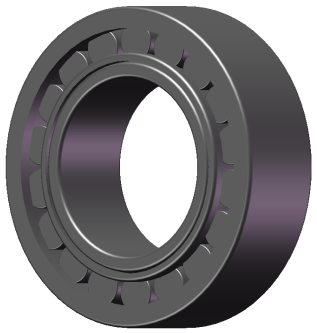

$R_{1,2}$:	min 3	mm	Chamfer Dimension
D1:	≈215.8	mm	Shoulder Diameter Outer Ring
F:	169	mm	Raceway Diameter Inner Ring
s:	max.3.2	mm	Permissible Axial Displacement From The Normal Position Of One Bearing Ring Relative To The Other

LILY®	SHANGHAI LILY BEARING LIMITED Email: lilybearing@lily-bearing.com
Part Number	NUH 2228 ECMH Cylindrical Roller Bearing