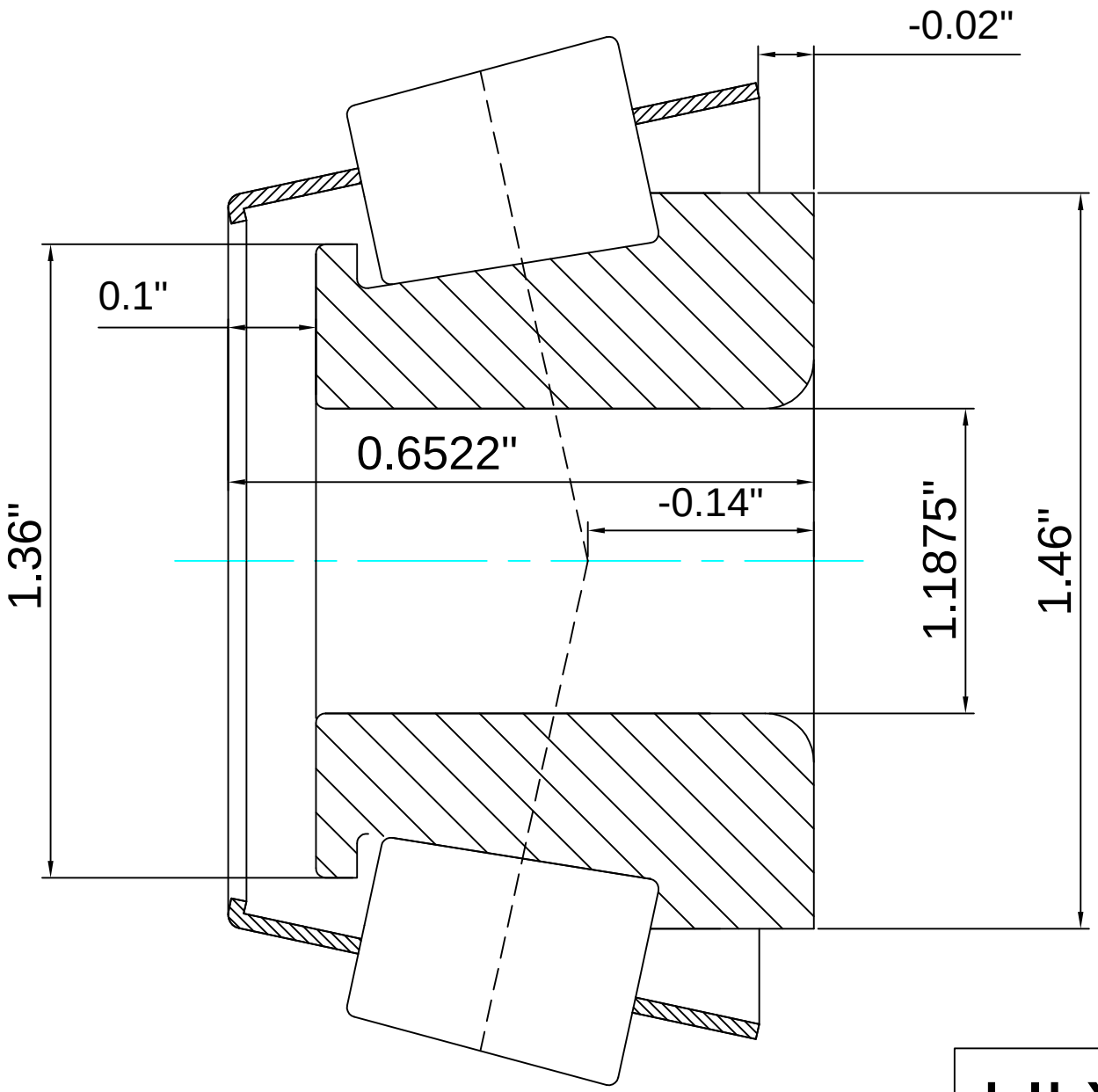

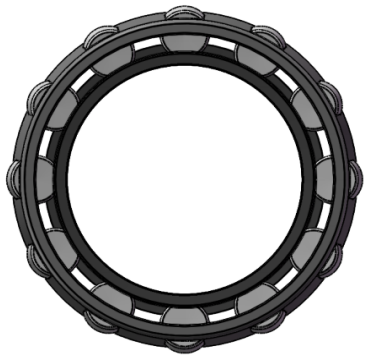

LILY®	SHANGHAI LILY BEARING LIMITED Email: lilybearing@lily-bearing.com
Part Number	17119(Single Cones - Imperial)