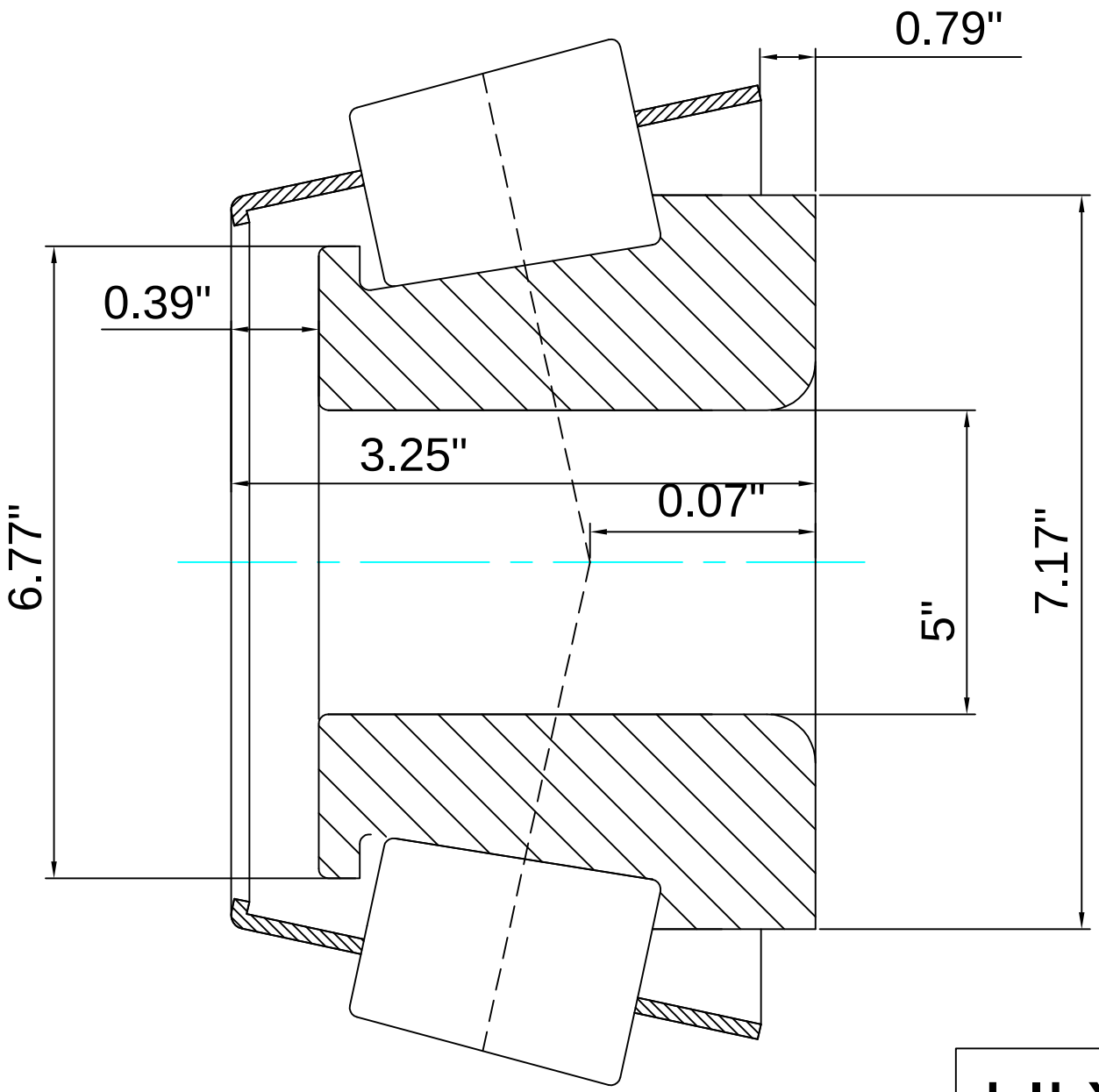


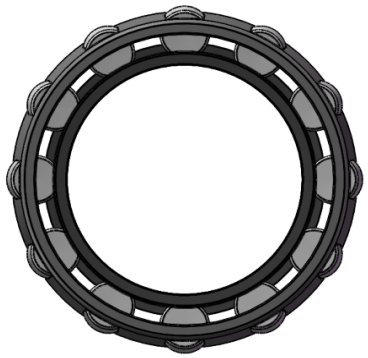

| | |
|---|---|
| LILY® | SHANGHAI LILY BEARING LIMITED<br>Email: lilybearing@lily-bearing.com |
| Part Number | HH932132 ( Single Cones - Imperial) |