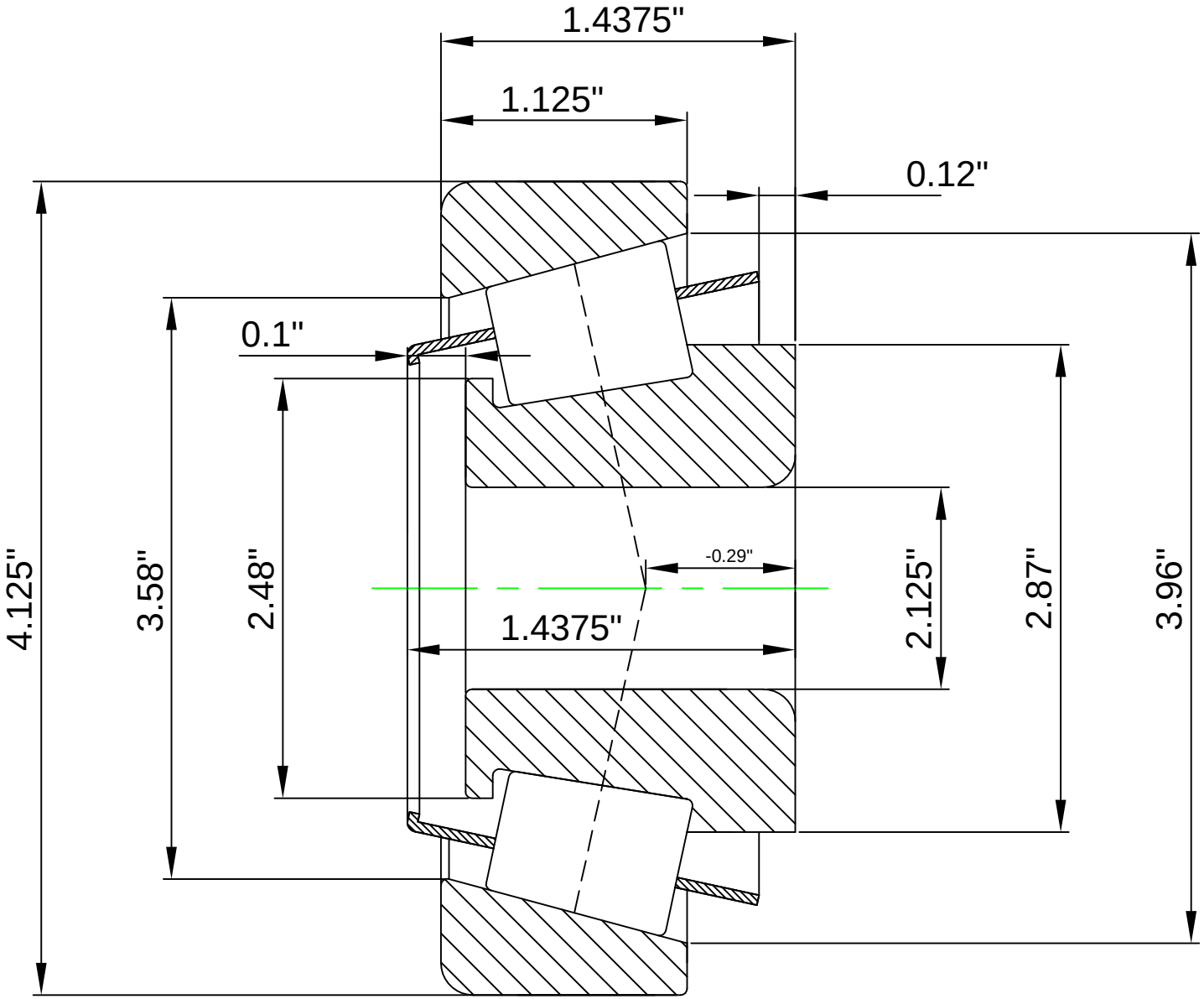

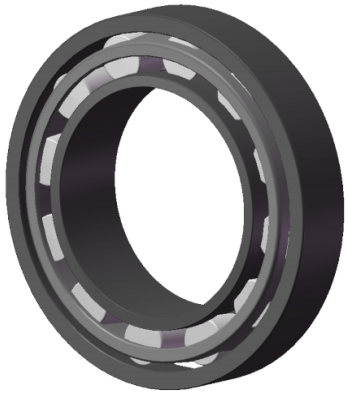

LILY®	SHANGHAI LILY BEARING LIMITED Email: lilybearing@lily-bearing.com
Part Number	TS SERIES HM807049-HM807011(Tapered Single Roller Bearings)