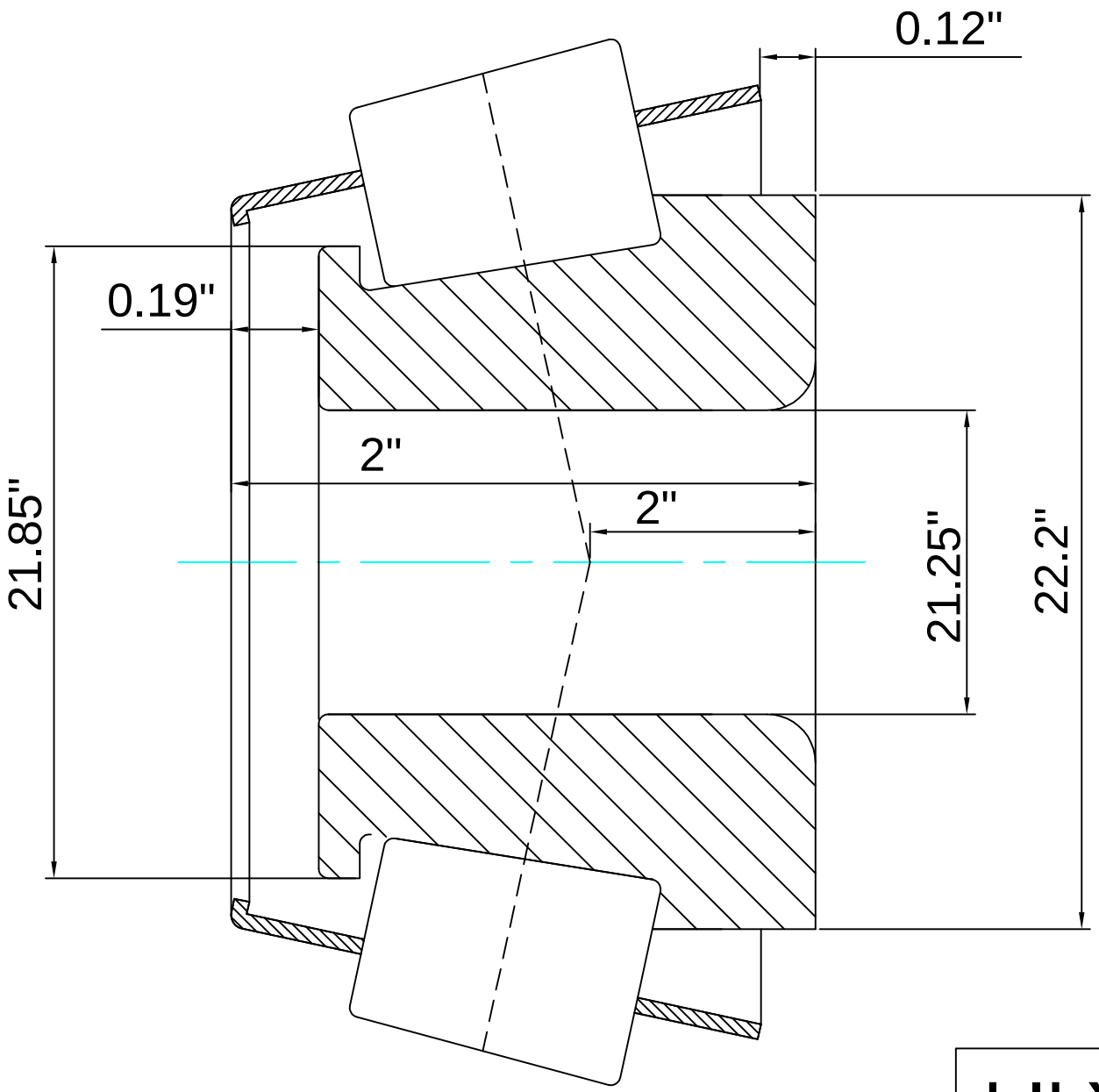

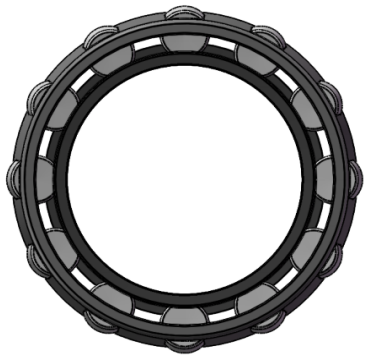

LILY®	SHANGHAI LILY BEARING LIMITED Email: lilybearing@lily-bearing.com
Part Number	LL575349 (Single Cones - Imperial)