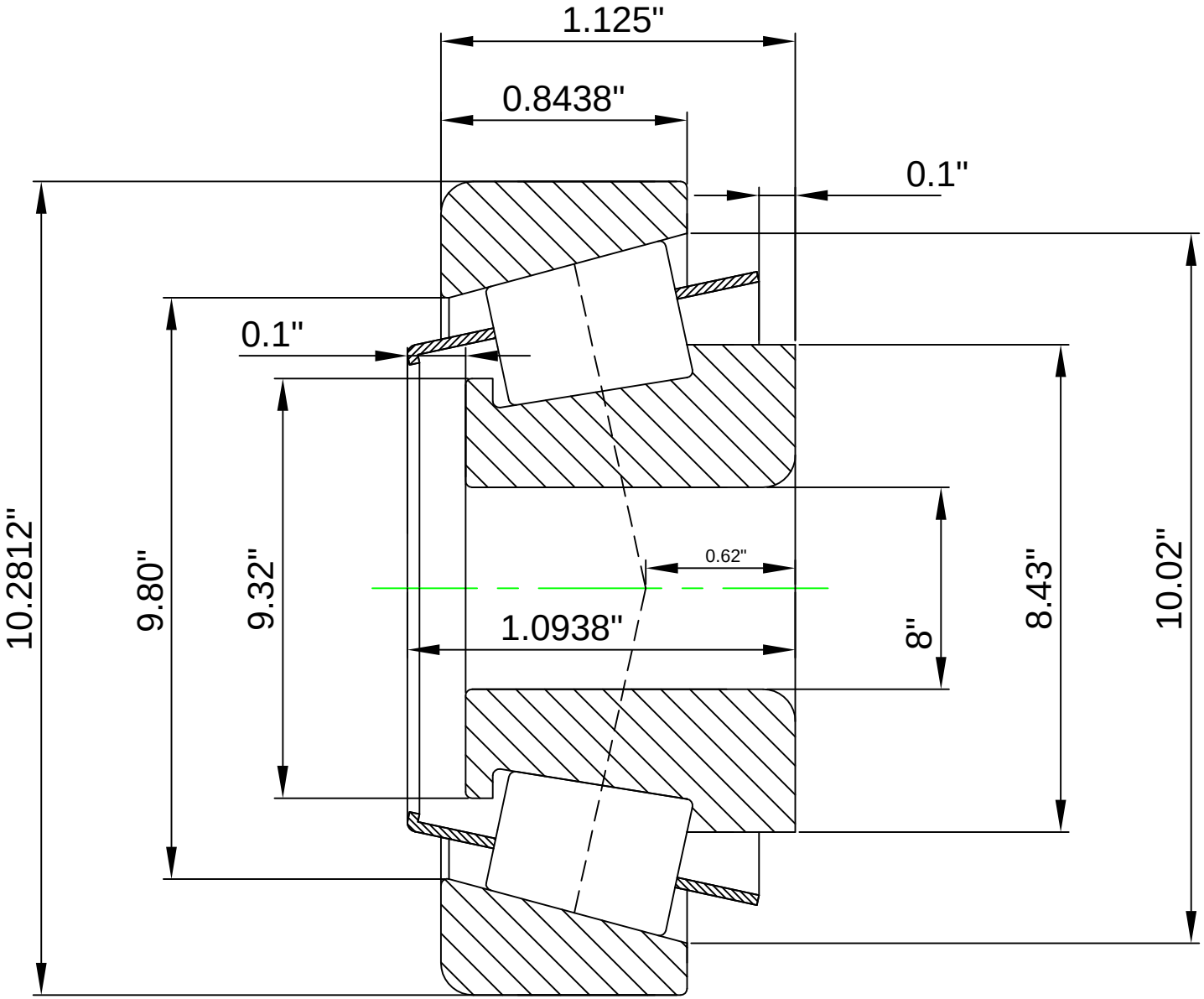

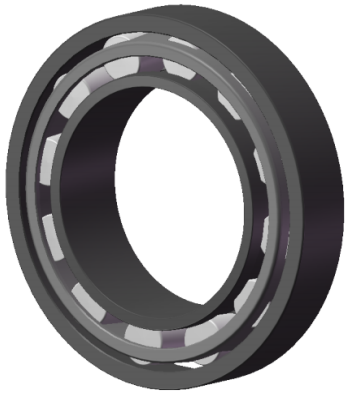

LILY®	SHANGHAI LILY BEARING LIMITED Email: lilybearing@lily-bearing.com
Part Number	TS SERIES LL641149-LL641110(Tapered Single Roller Bearings)