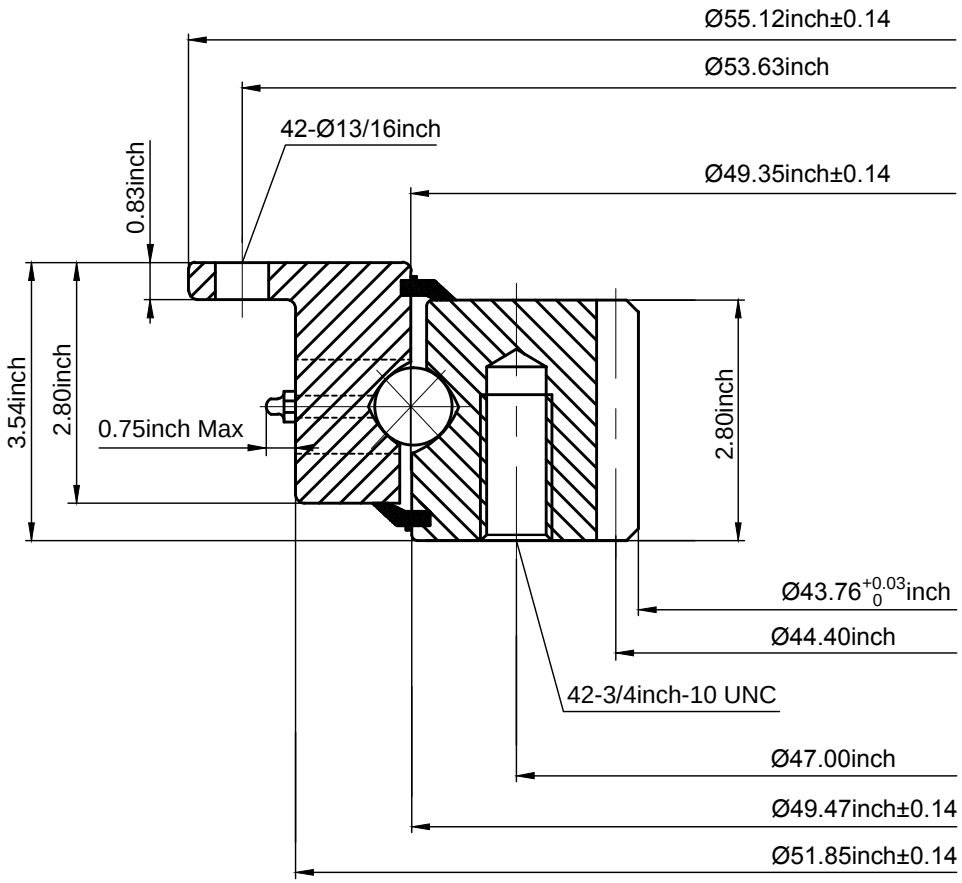


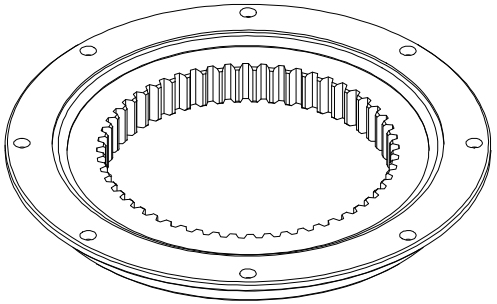

| | |
|---|---|
| LILY® SHANGHAI LILY BEARING LIMITED https://www.lily-bearing.com/ | |
| SERIES 2100 SLEWING RING BEARING | PART NUMBER L9-49N9Z |