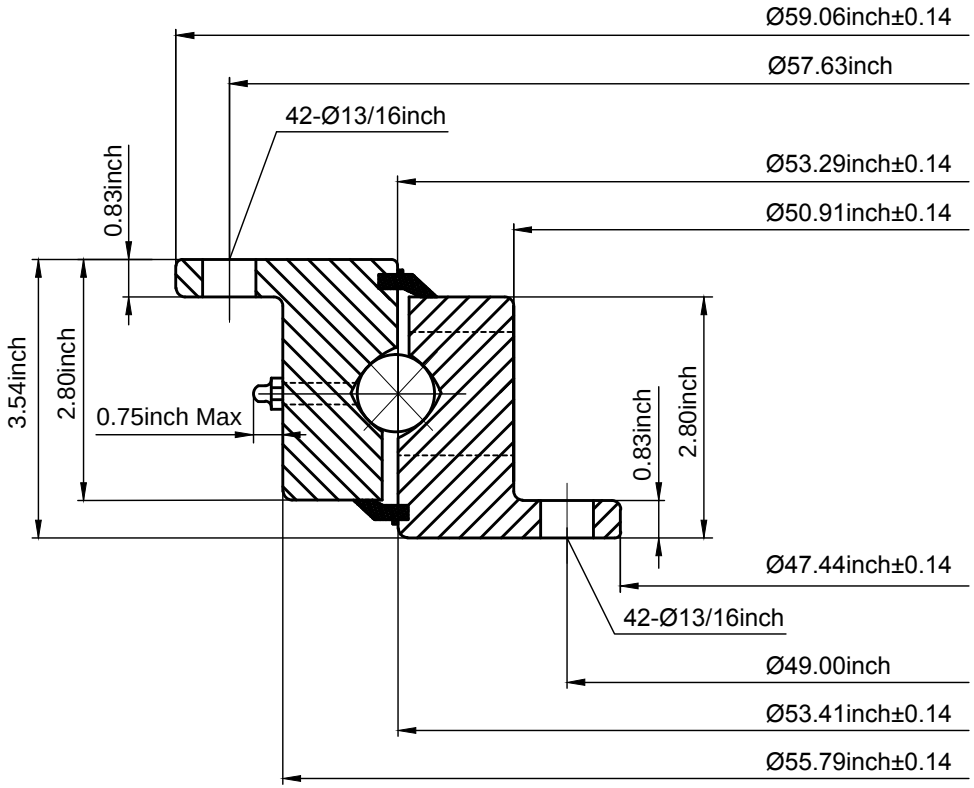

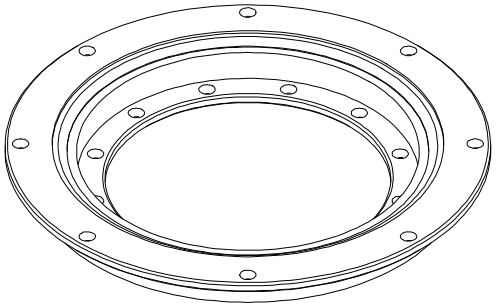

LILY® SHANGHAI LILY BEARING LIMITED https://www.lily-bearing.com/	
SERIES 2100 SLEWING RING BEARING	PART NUMBER L9-53P9Z