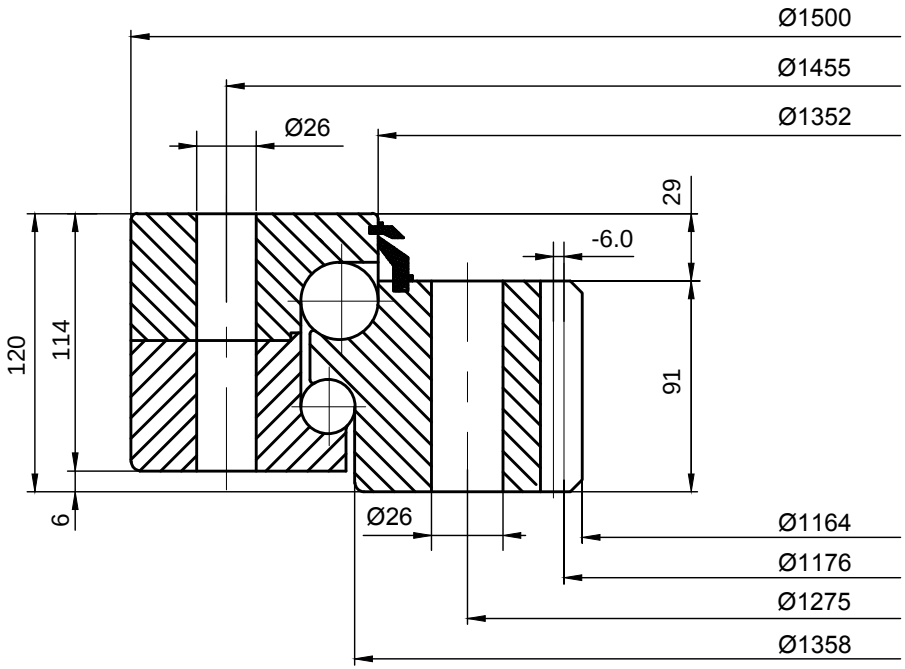

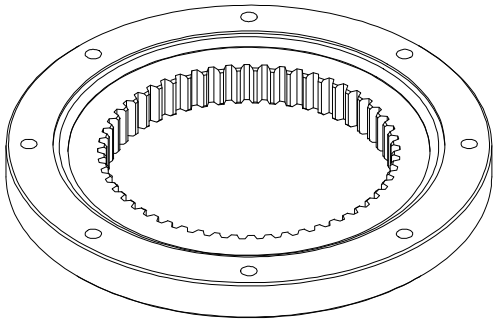

LILY® SHANGHAI LILY BEARING LIMITED
https://www.lily-bearing.com/

STANDARD SERIES KD 320 SLEWING BEARINGS	PART NUMBER 012.30.1381.000.11.1503