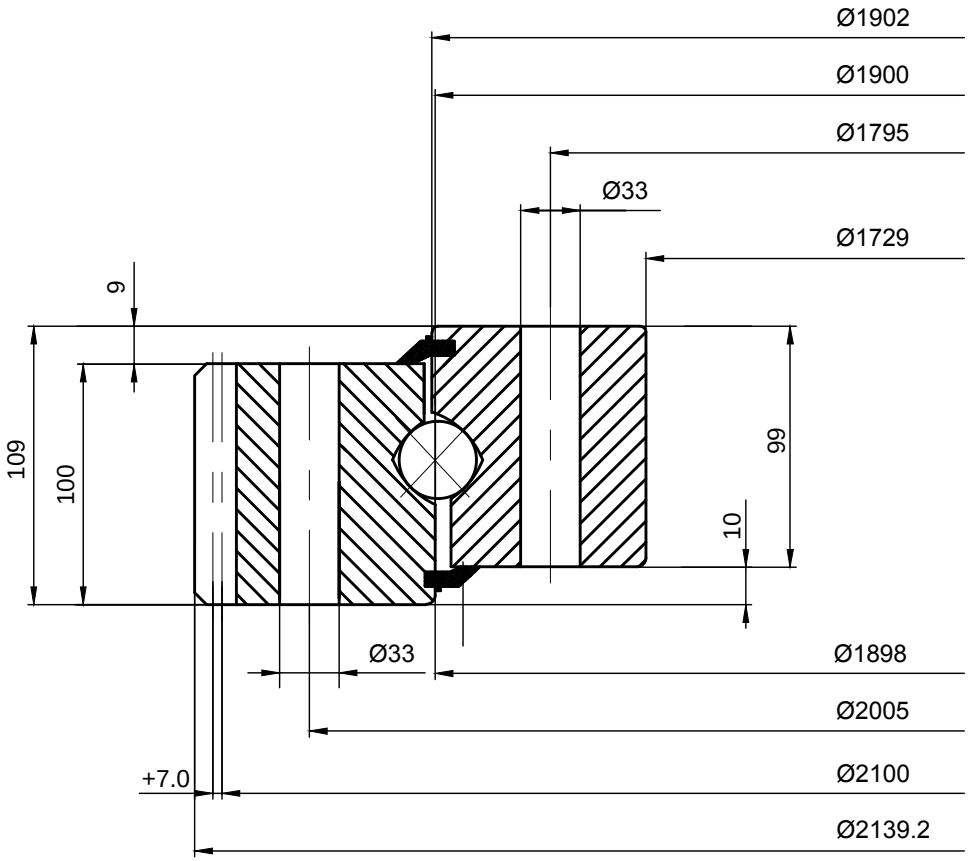

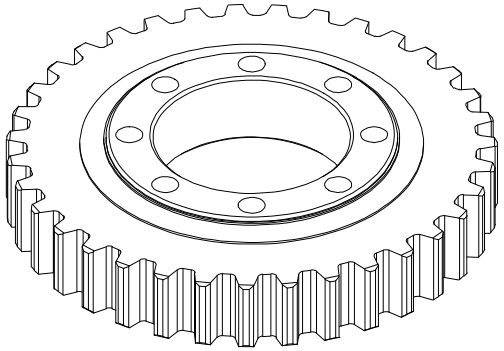

LILY® SHANGHAI LILY BEARING LIMITED
https://www.lily-bearing.com/

SERIES 06 SLEWING BEARINGS	PART NUMBER 061.50.1900.001.49.1504