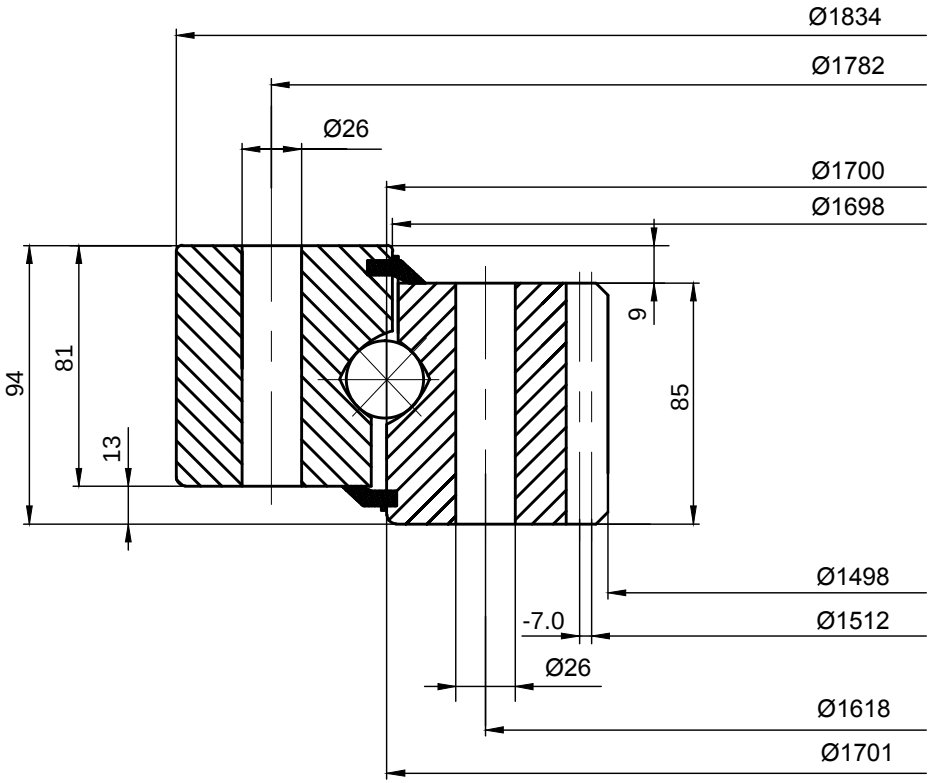

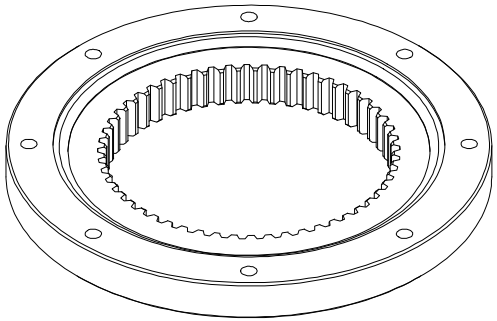

LILY® SHANGHAI LILY BEARING LIMITED
https://www.lily-bearing.com/

SERIES 06 SLEWING BEARINGS	PART NUMBER 062.40.1700.008.29.1503