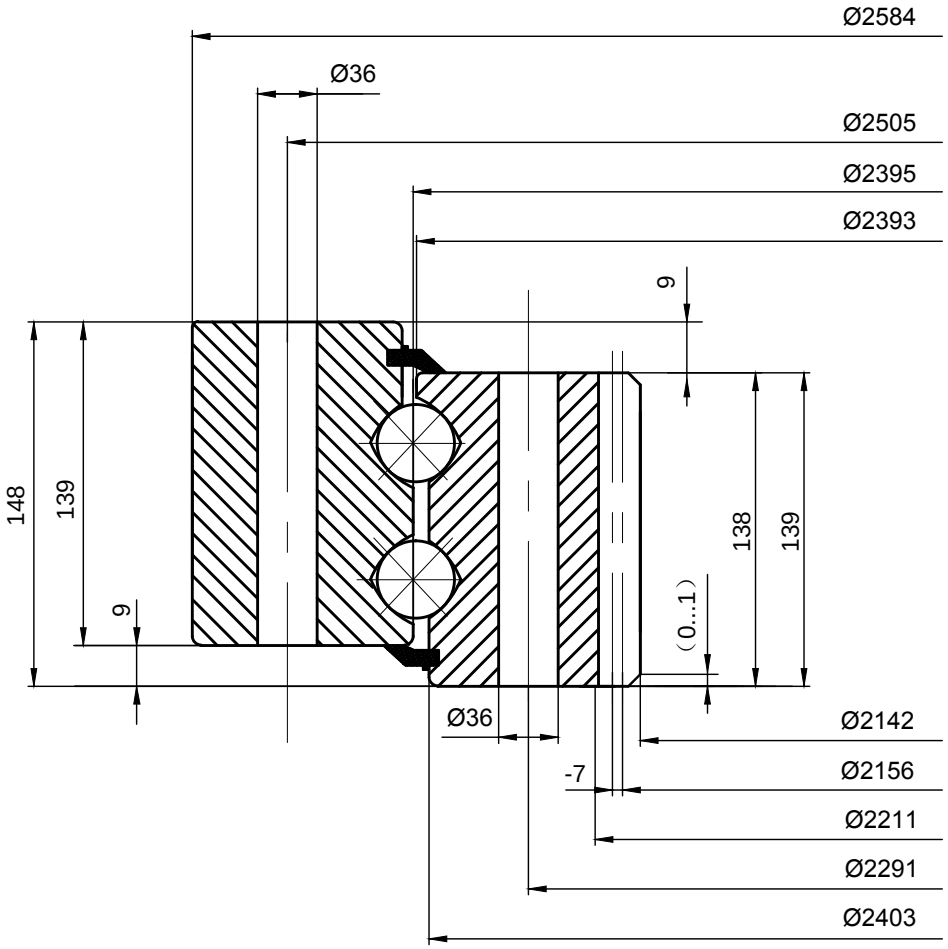

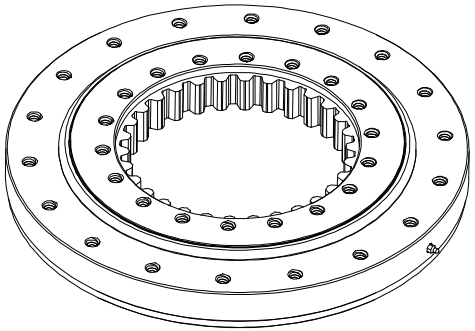

LILY® SHANGHAI LILY BEARING LIMITED
https://www.lily-bearing.com/

SERIES 09 SLEWING BEARINGS	PART NUMBER 092.40.2395.990.11.1502