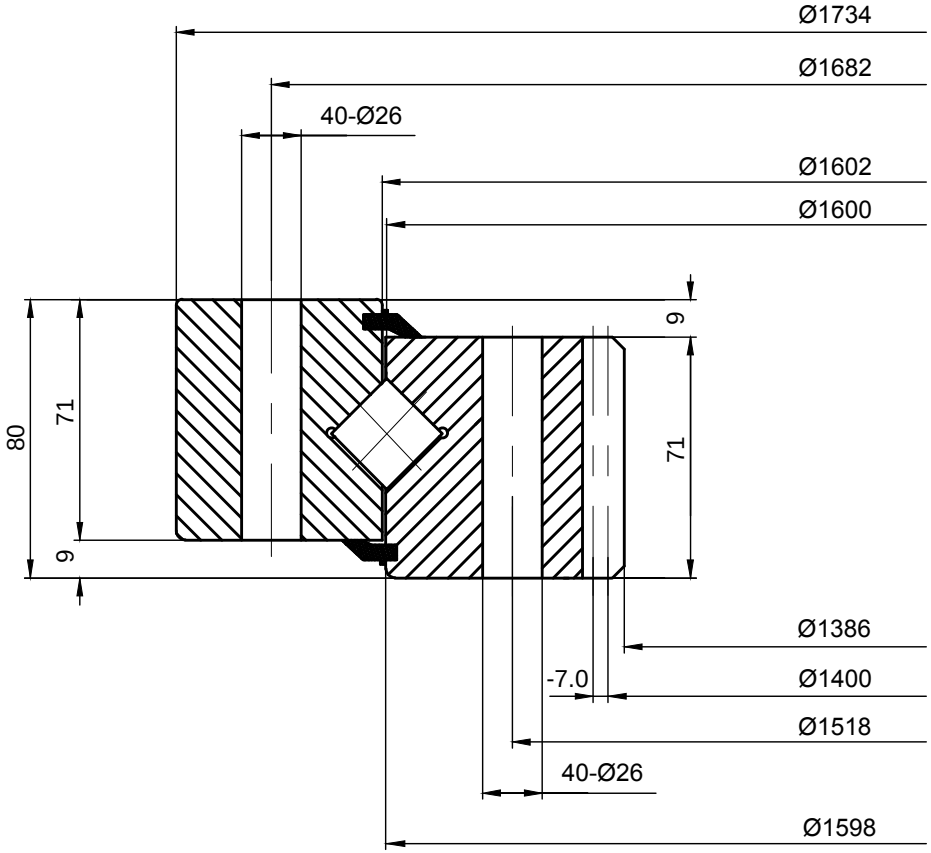

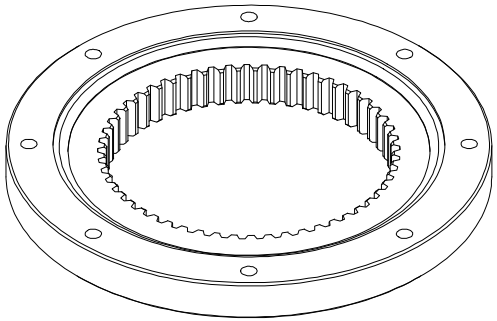

LILY® SHANGHAI LILY BEARING LIMITED
https://www.lily-bearing.com/

SERIES RD 800 SLEWING BEARINGS	PART NUMBER 162.28.1600.890.11.1503