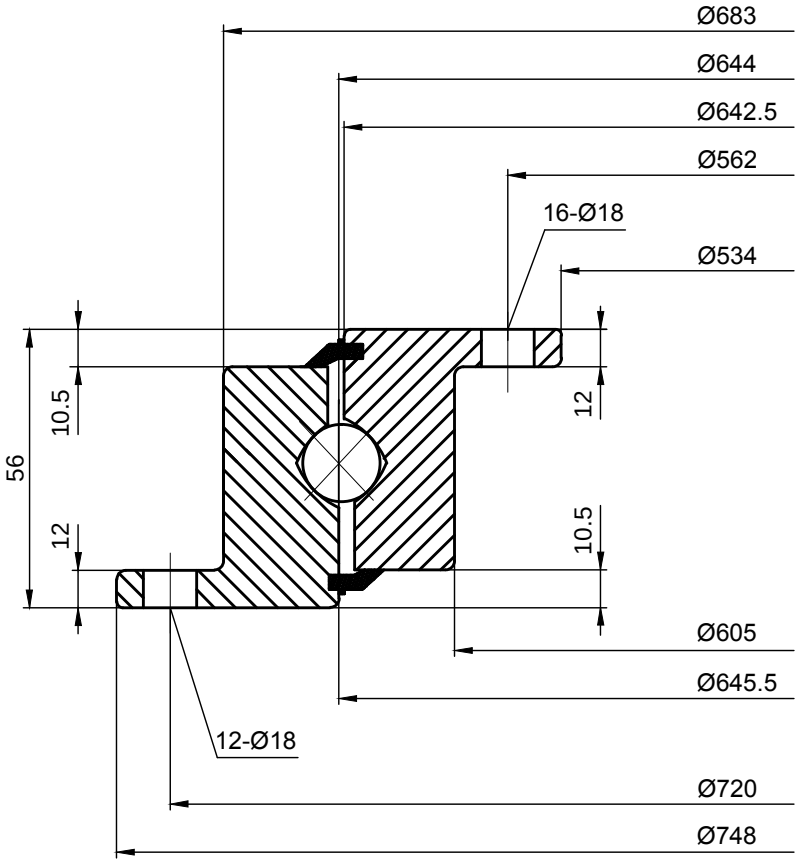

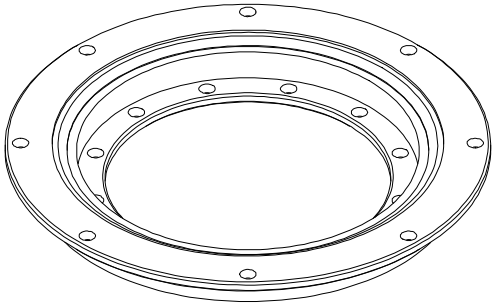

LILY® SHANGHAI LILY BEARING LIMITED
https://www.lily-bearing.com/

SERIES KD 210 SLEWING BEARINGS	PART NUMBER 230.20.0600.013 Typ 21/750.0