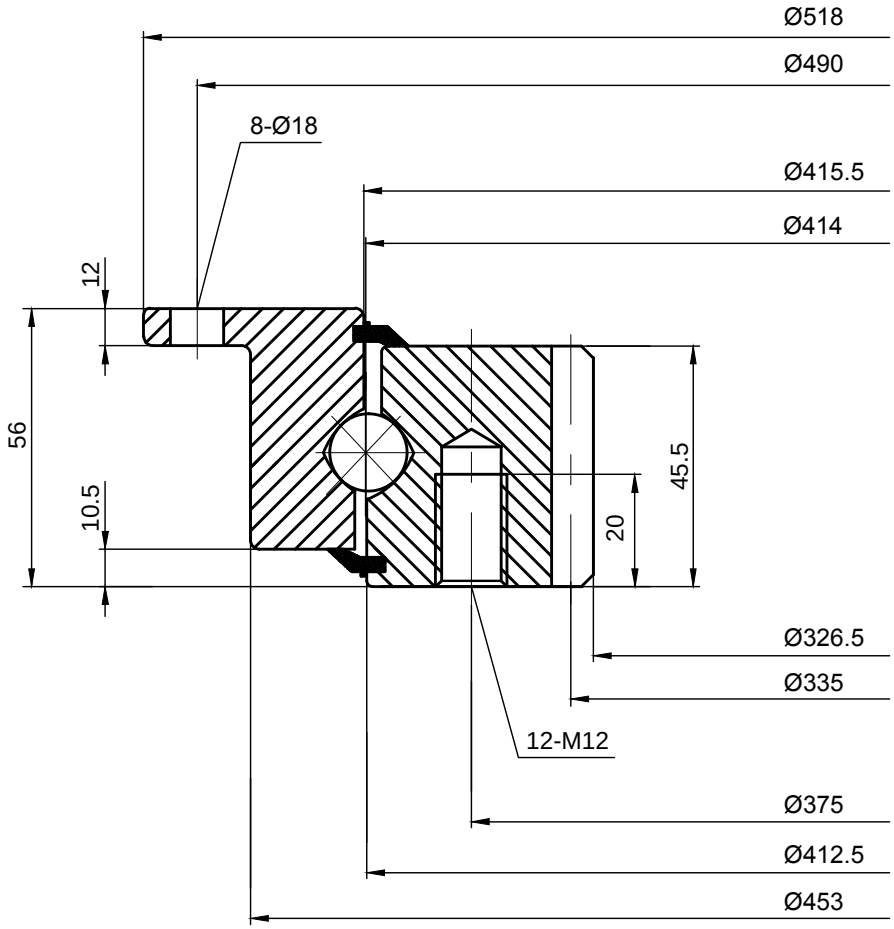

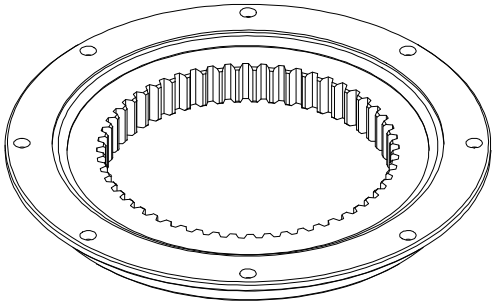

LILY® SHANGHAI LILY BEARING LIMITED
https://www.lily-bearing.com/

SERIES KD 210 SLEWING BEARINGS	PART NUMBER 232.20.0400.013 Typ 21/520.2