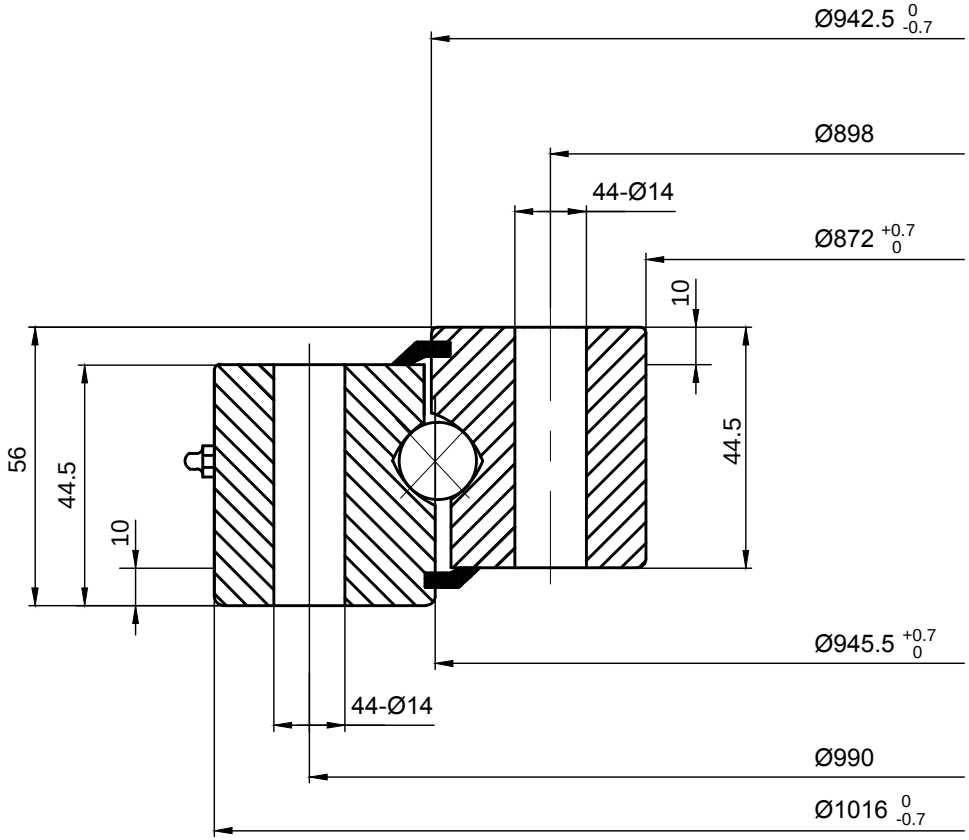


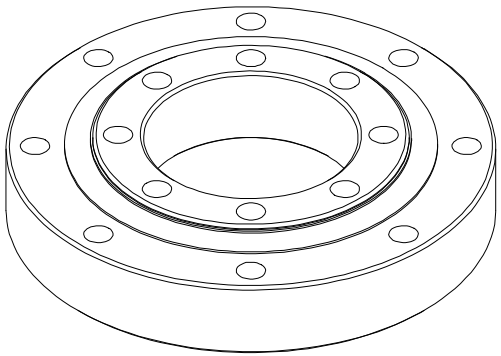

LILY® SHANGHAI LILY BEARING LIMITED
https://www.lily-bearing.com/

| | |
|---|---|
| SERIES VSU20<br>SLEWING BEARINGS | PART NUMBER<br>VSU200944 |