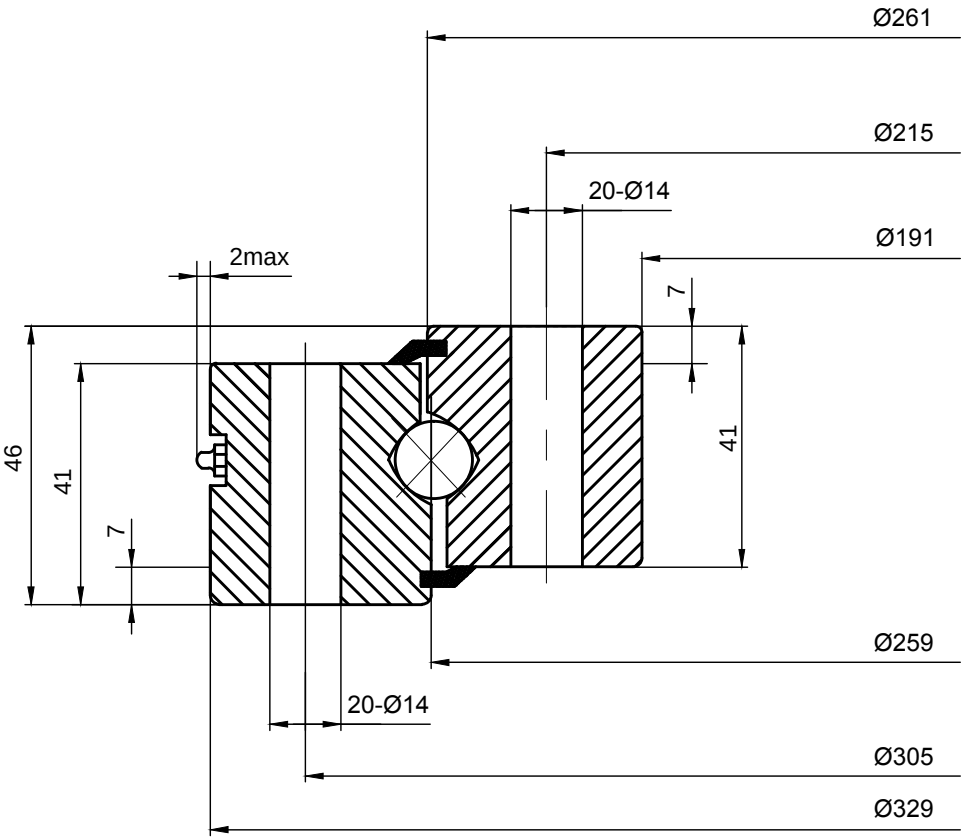

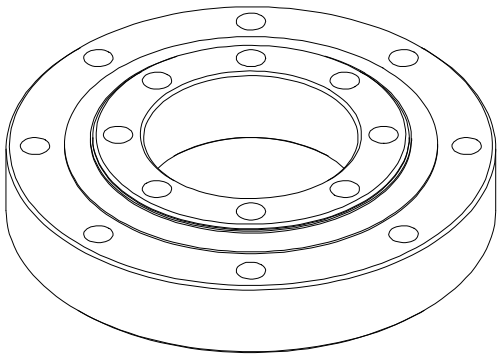

LILY® SHANGHAI LILY BEARING LIMITED
https://www.lily-bearing.com/

SERIES VU SLEWING BEARINGS	PART NUMBER VU200260