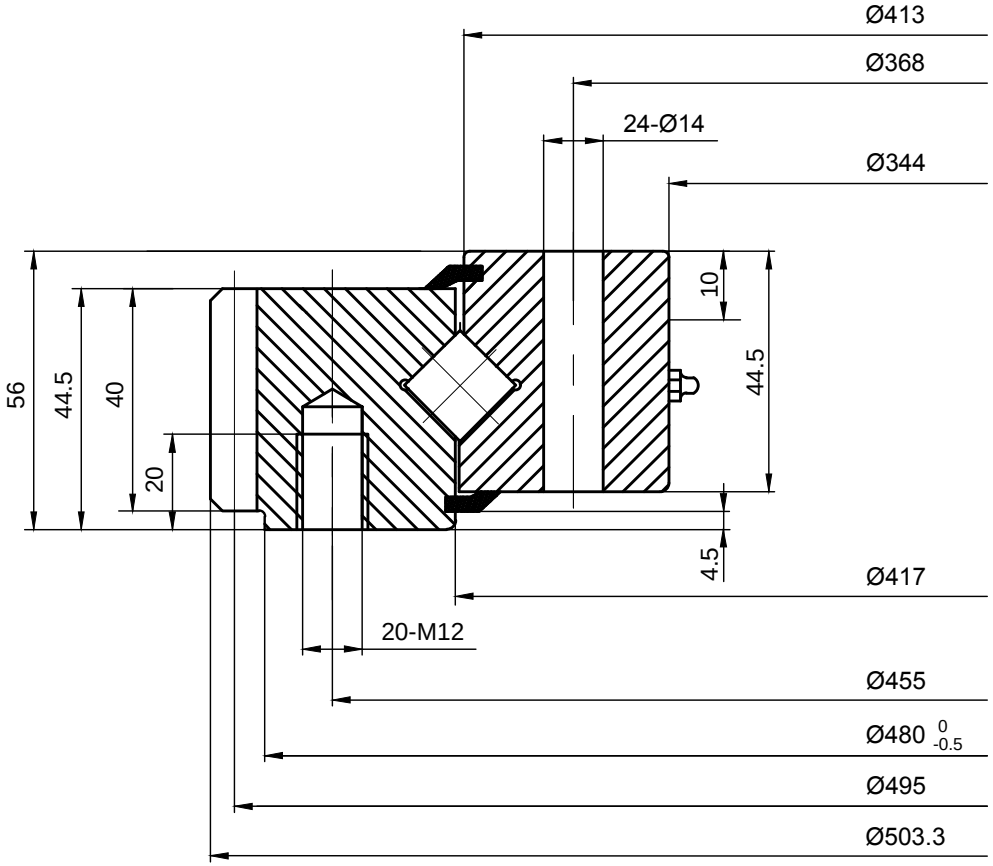

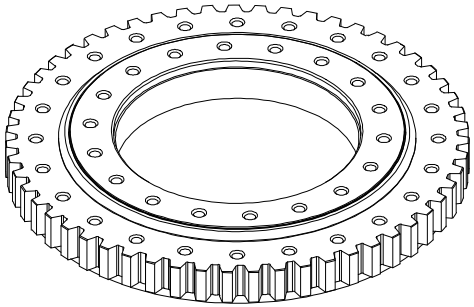

LILY® SHANGHAI LILY BEARING LIMITED
https://www.lily-bearing.com/

SERIES XSA14 SLEWING BEARINGS	PART NUMBER XSA140414-N