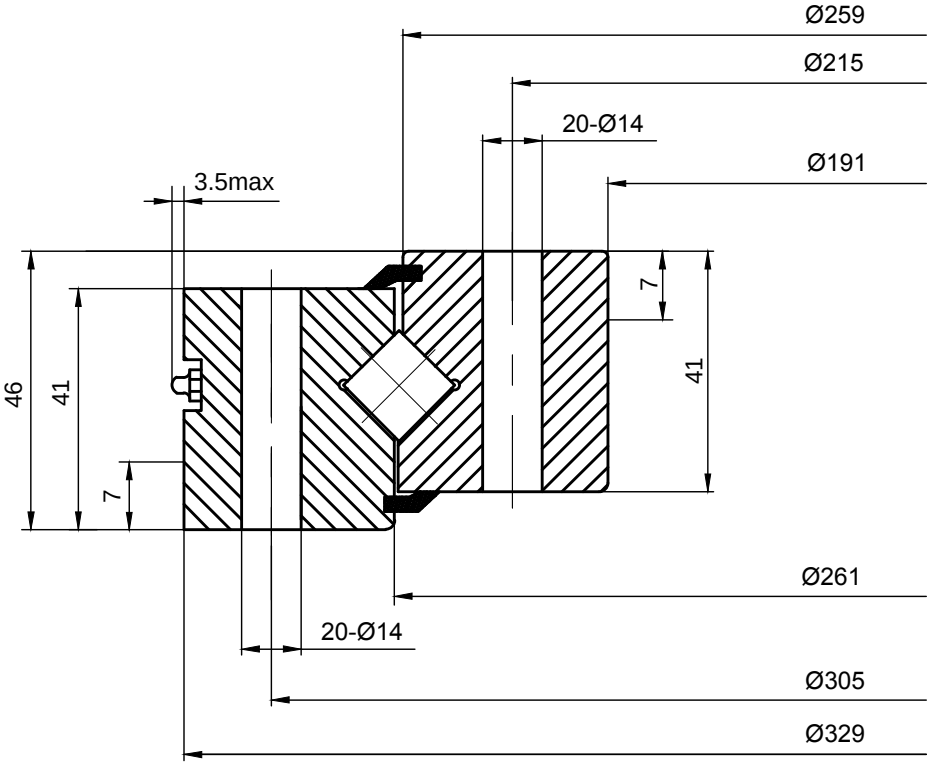

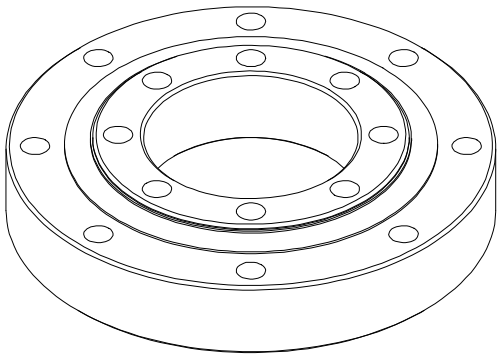

LILY® SHANGHAI LILY BEARING LIMITED
https://www.lily-bearing.com/

SERIES XU SLEWING BEARINGS	PART NUMBER XU160260